Type	N° article		Vitesse (tr/min)	Voltage (V)	Puissance (kW)	IP	Distance		Débit (m3/h)	(Pa)	Poids (kg)
							1 m	5 m			
WPA-5-D-N/Ex	888W09	II 2G c Ex e II T3	3000	3 x 400	0.55	54	73/67	59/53	1900	1250	25
WPA-6-D-N/Ex	888W10	II 2G c Ex e II T3	3000	3 x 400	0.75	54	78/75	64/61	2500	1700	26
WPA-7-D-N/Ex	888W11	II 2G c Ex e II T3	3000	3 x 400	1.1	54	81/74	67/60	3100	1800	31
WPA-8-D-N/Ex	888W12	II 2G c Ex e II T3	3000	3 x 400	1.5	54	82/78	68/64	3900	2050	38
WPA-9-D-N/Ex	888W13	II 2G c Ex e II T3	3000	3 x 400	2.2	54	86/82	72/68	4500	2400	42
WPA-10-D-N/Ex	888W14	II 2G c Ex e II T3	3000	3 x 400	4.0	54	87/81	73/67	7400	2600	74

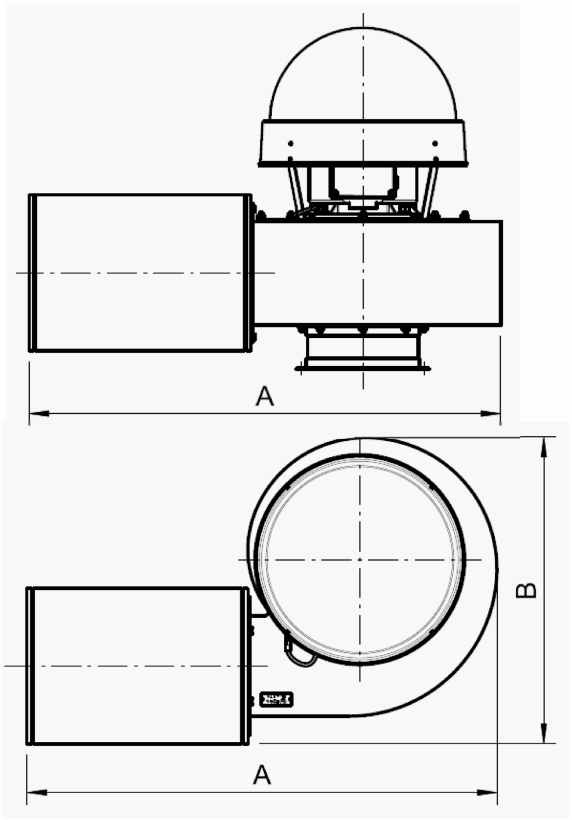

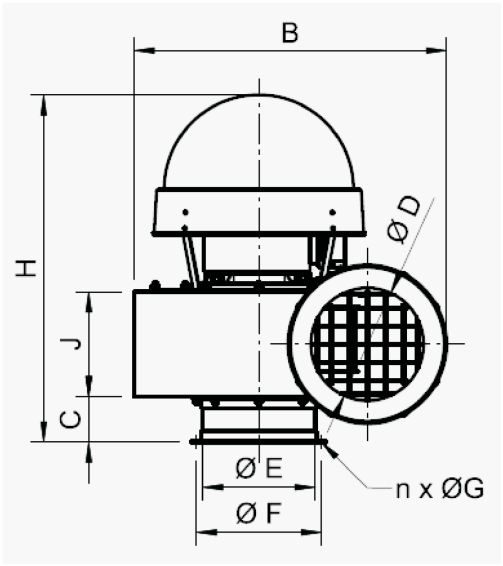

Dimensions :

Type	A [mm]	B [mm]	C [mm]	D [mm]	E [mm]	F [mm]	n [pièces]	G [mm]	H [mm]	J [mm]
WPA-5-D-N/Ex	905	525	60	160	160	194	6	6.5	500	140
WPA-6-D-N/Ex	915	550	60	200	160	194	6	6.5	535	155
WPA-7-D-N/Ex	965	570	60	200	160	194	6	6.5	535	155
WPA-8-D-N/Ex	990	600	60	200	200	224 234 246	8 6 8	9.0 6.5 9.0	535	155
WPA-9-D-N/Ex	1030	665	60	200	200	224 234 246	8 6 8	9.0 6.5 9.0	605	155
WPA-10-D-N/Ex	1050	675	100	250	250	275	8	9.0	720	232